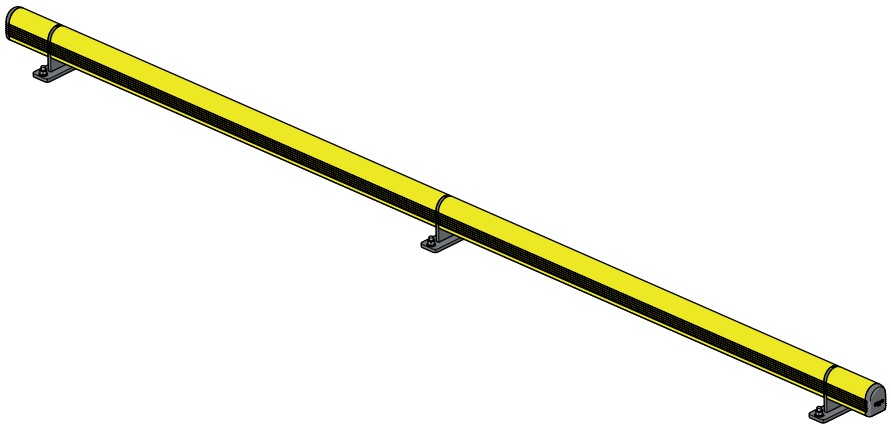

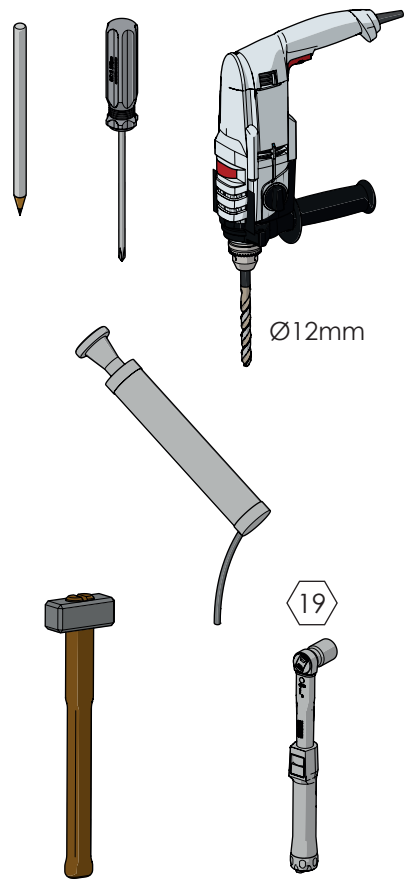

1

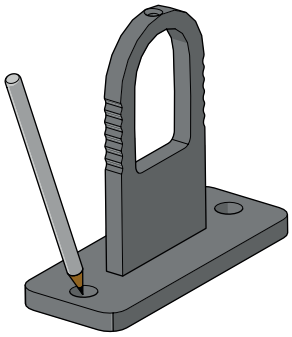

2

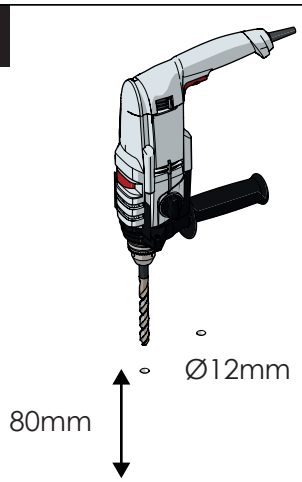

3

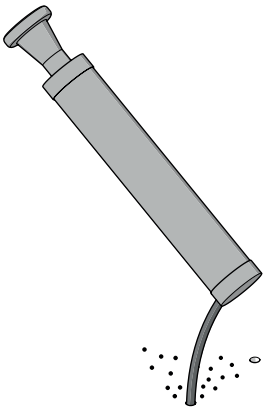

4

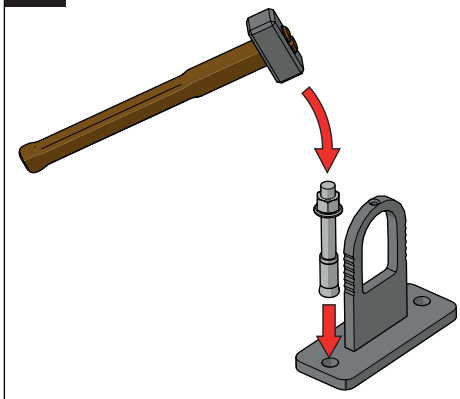

5

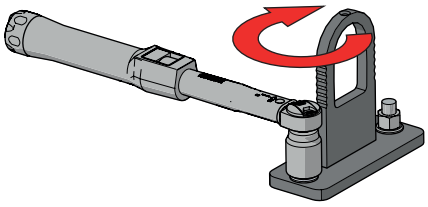

6

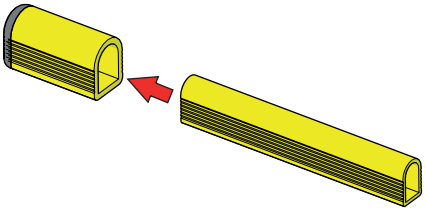

MPM PLASTIC PROFILES

7

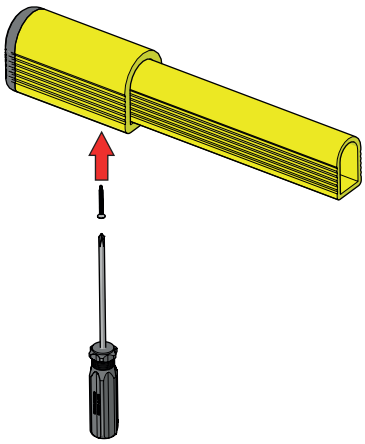

8

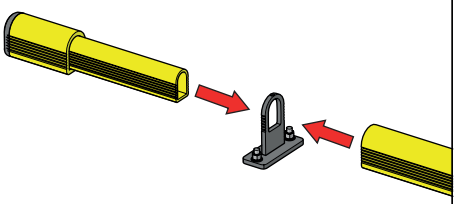

9

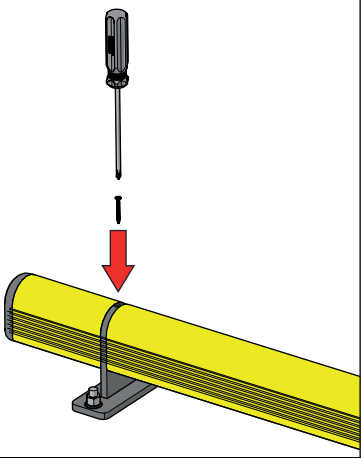

10

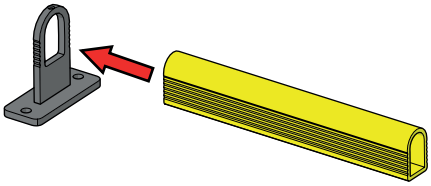

11

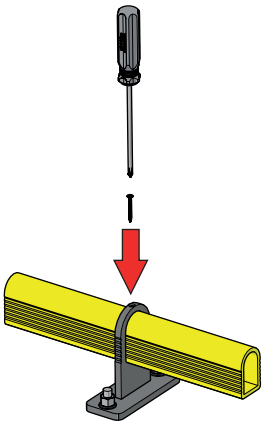

12

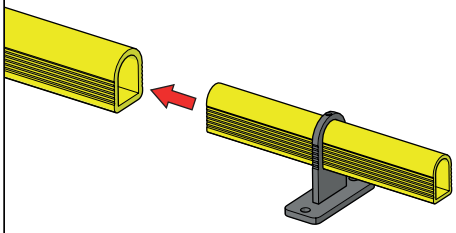

13

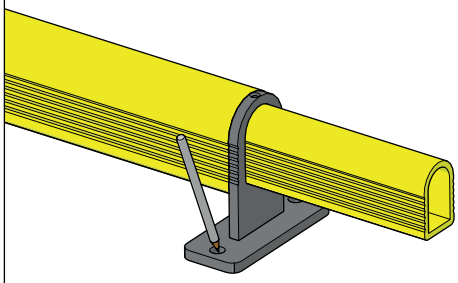

14

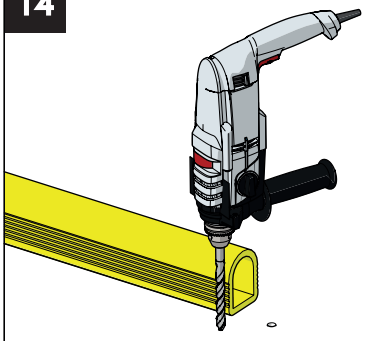

15

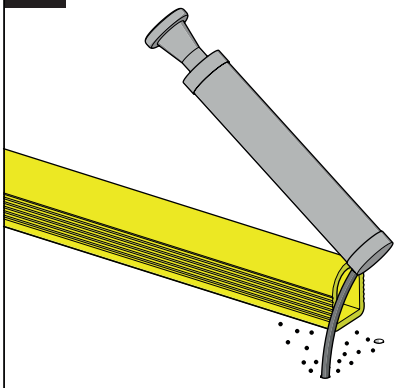

16

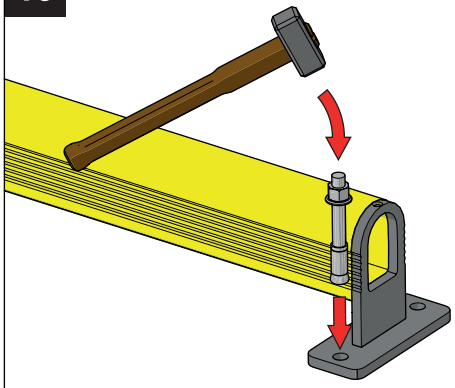

17

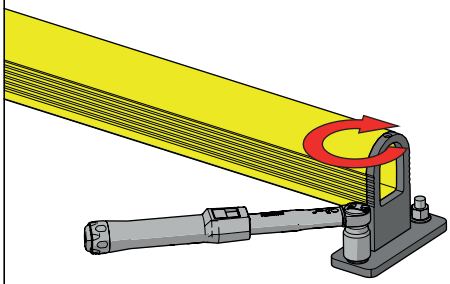

18

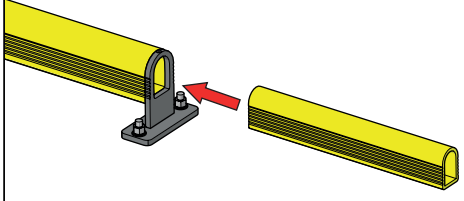

MPM PLASTIC PROFILES

19

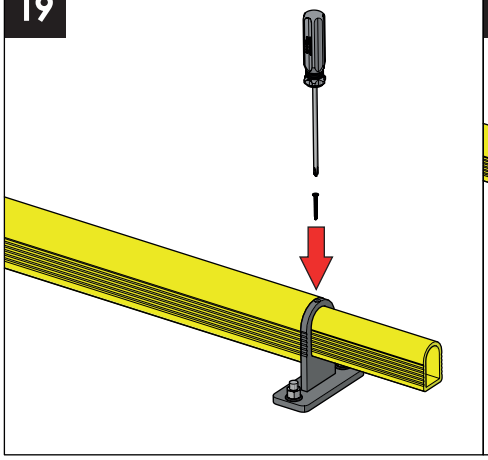
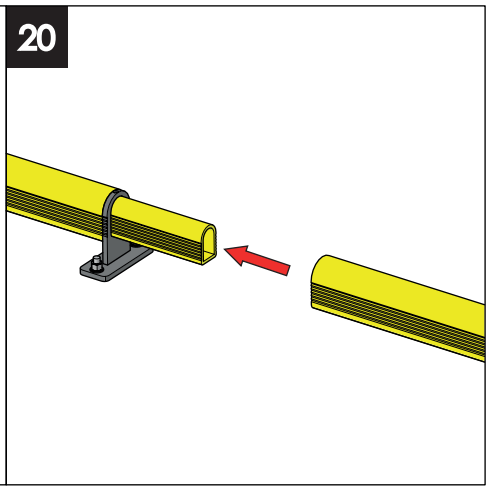
20